Shengli Gao

Issue No. : 151EVMA100317A1
Date of Issue : March 17.2010
Classification : ■ New ☐ Changed

PRODUCT SPECIFICATION FOR APPROVAL

Product Description : 2mm Square SMT Trimmer Potentiometers
Product Part Number : ＥＶＭ２ＧＳＸ８０Ｂ＊＊

Country of Origin : JAPAN
Applications : Standard Components for Generalized Electric Equipment

*If you approve this specification, please fill in and sign the below and return 1 copy to us.

Approval No :

Approval Date :

Executed by :

(signature)

Title :
Dept. :

Circuit Components Business Unit
Panasonic Electronic Devices Co., Ltd.

401 Sadamasa-cho,
Fukui City 910-8502 Japan

Phone : +81-776-56-8034
Fax : +81-776-56-3114

Prepared by : Engineering Section
Contact Person :
Signature
Name(Print) M. Tsubota
Title :

Authorized by :
Signature
Name(Print) S. Hoshitoku
Title : Manager of Engineering

Panasonic

1 Part Numbering System

EVM	2GS	X80	B13
A	B	C	D

A:Product Code
B:Type and Construction
C:Packaging Spec.
D:Taper and Resistance

2 Appearance and Shape

2.1 Marking

Nominal Total Resistance shall be marked by 2 digits. Please refer to table noted right side.

Nominal Total Resistance	Marking
100 ohm	12
1 k ohm	13
10 k ohm	14
1 M ohm	16

2.2 Dimensions in mm(not to scale)

General Tolerance ±0.3

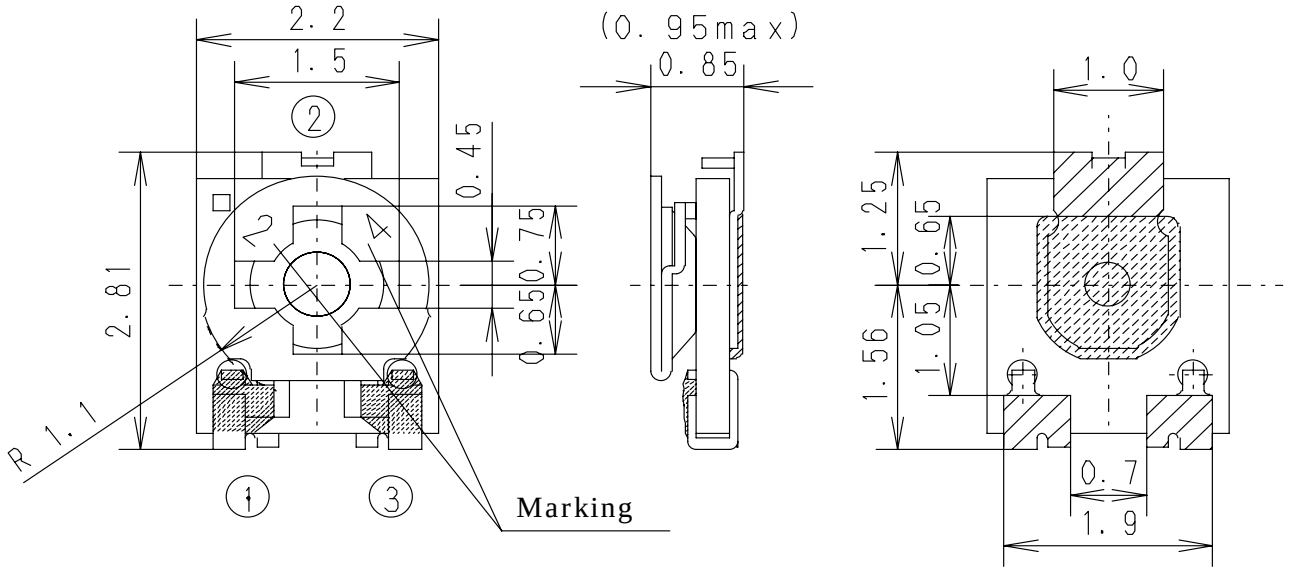

Mass (Weight) : About 14mg / pc

Recommended Land Pattern

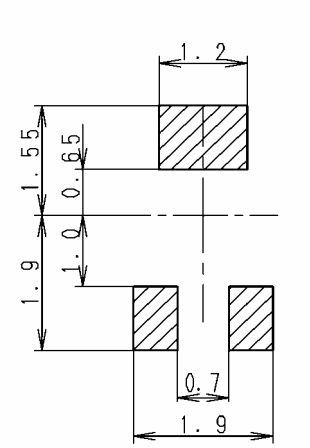

Circuit Diagram

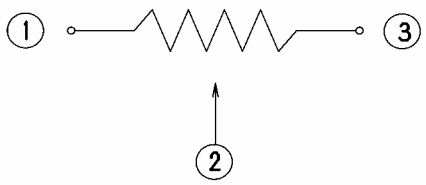

Part Name 2mm Square Trimmer Potentiometers	Issue	Revisions
Part No. EVM2GSX80B**	Drawing No. EVM2GSE00 1	1/11

2.3 Constructions abd Parts List

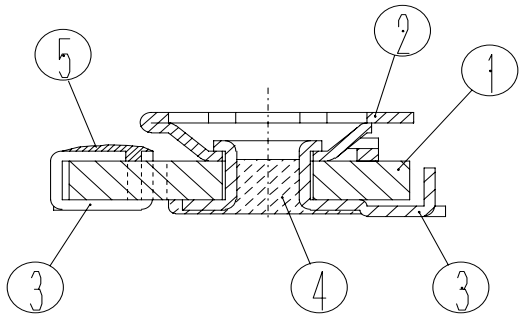

NO	Parts	Materials	Notes
1	Resistor Base	Base Alumina Resist. Metalgraze	
2	Brush	Stainless Steel	
3	Terminal	Steel	Tin Plating (Sn 100 %)
4	Coating	UV Resin	
5	Solder	Tin,Silver, Copper Alloy Solder	

3 Performance

3.1 Rating

Item	Performance	Remarks
Power Rating	0.15 W For potentiometers operated in ambient temperature above 70 deg.C , Power Rating shall be derated in accordance with the figure at right.	Power Derating Curve 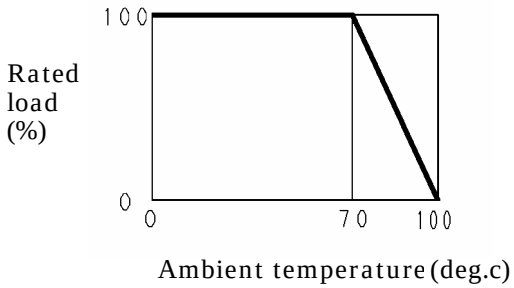
Maximum Operating Voltage	50 V [DC]	
Voltage Rating	Voltage Rating should be Maximum Operating Voltage when E shall exceed Maximum Operating Voltage.	Voltage Rating $E = \sqrt{P \times R}$ E: Voltage Rating(V) P: Power Rating(W) R: Nominal Total Resistance (ohm)
Operating Temperature Range	-40 deg.c to 100 deg.c	
Nominal Total Resistance	100 ohm to 1 M ohm	
Tolerancce of Total Resistance	± 20 %	

3.2 Characteristics

3.2.1 Electrical Characteristics

Item	Performance	Test Methods
Resistance Law	0 B (Linear)	Conforming to JIS C 5260-1 4.9
Minimum Resistance	･100 ohm ≦ R <500 ohm 20 ohm or less ･R≧500 ohm Shall be below 5 % of Nominal Total Resistance.	Conforming to JIS C 5260-1 4.7
Temperature Coefficients of Resistance	Shall be within ± 250 $\times 10^{-6}$ /deg.C	Conforming to JIS C 5260-1 2.2.19
Sliding Noise	Shall be below 5 % of Nominal Total Resistance. $\frac{Vn / Is}{R} \times 100 \leqq 5\ \%$ Vn :Noise voltage Is ：Test current R :Nominal Total Resistance 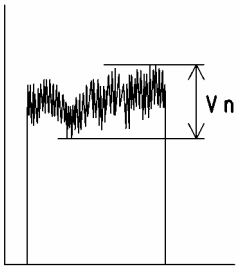 Noise voltage	Conforming to JIS C 5260-1 4.15 method B. Constant current power source 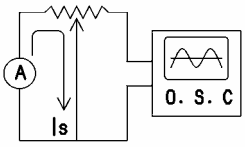 Oscilloscorp or X-Y recorder Except both terminations. Operating rate of actuator at meansurement 5 s/cycle to 15 s/cycle Test currrent Is＝100×a / R(mA) R: Nominal Total Resistance / a less than 10 k ohm / 10 more than 10 k ohm and less than 1 M ohm / 100 more than 1 M ohm / 1000

3.2.2 Mechanical Characteristics

Item	Performance	Test Methods
Angle of Rotation	Electrically Effective Range 300 ° ±20 °	Conforming to JIS C 5260-1 4.4.6
Rotation Torque	0.5 mN・m to 10 mN・m	Conforming to JIS C 5260-1 4.18
Adhesion	No damage on appearance, mechanical and electrical performance.	・After mounting SMD at recommended land pattern on the test printed wiring board. ← horizontal direction 10 N ↑ vertical direction 5 N Apply the pressure in two direction for each time 10 s as illustrated above.
Resistance to Vibration	ΔV_{12} / V_{13} × 100 ≦ ± 2 V_{13} :Input voltage (terminal 1-3) V_{12} :Output voltage (terminal 1-2) ΔV_{12} : change of V_{12}	・Frequency range : 10 Hz to55 Hz ・Peak to peak amplitud : 1.5 mm ・Sweeping : 5 min/cycle ・Test duration : 2 h in each directions(X,Y,Z) (6 h in total) ・Brush setting point : middle point
Shock	ΔV_{12} / V_{13} × 100 ≦ ± 2 V_{13} :Input voltage (terminal 1-3) V_{12} :Output voltage (terminal 1-2) ΔV_{12} : change of V_{12}	・Wave form : Half-sine pulse ・Peak acceleration : 981 m/s^2 ・Duration of pulse : 6 ms ・Number of times : 3 times in each directions(X,Y,Z) (18 times in total) ・Brush setting point : middle point
Resistance to Soldering Heat	Total resistance change shall be within ± 2 % of initial value and no damage on apperance.	Conforming to 4.1 Mounting Notes,Soldering Method(1). ・Number of times : 1 time
Solderability	New solder should be wet on the electrode and be raised, and wet angle of the solder should be less than 90degree.	Reflow soldering should be done on the print board for the test by the recommended land pattern. ・Solder paste :Sn-3.0Ag-0.5Cu(RMAtype) ・Paste thickness :150 μm ・Reflow conditions :Peak-temp. 250 deg.C maximum 230 deg.C or more time 30 s to 40 s

3.2.3 Environmental Characteristics

Item	Performance	Test Methods
Resistance to Cold	Total resistance change shall be within ± 5 % of initial value.	Test temperature : -40 deg.C ± 3 deg.C Test duration : 96 h ± 4 h Brush setting point : middle point
Resistance to Heat	Total resistance change shall be within ± 5 % of initial value.	Test temperature : 70 deg.C ± 2 deg.C Test duration : 500 h ±12 h Brush setting point : middle point
Change of Temperature	Total resistance change shall be within ± 5 % of initial value.	Low temperature :-40 deg.C ± 3 deg.C, 30 min High temperature : 85 deg.C ± 2 deg.C, 30 min Room temperature : 5 min Number of temperature change cycle : 50 cycle Brush setting point : middle point
Resistance to Damp,Heat	Total resistance change shall be within ± 5 % of initial value.	Test temperature : 60 deg.C ± 2 deg.C Relative humidity : 90 %RH to 95 %RH Test duration : 500 h ± 12 h Brush setting point : middle point
Endurance (Under Damp Load)	Total resistance change shall be within ± 5 % of initial value.	Test temperature : 60 deg.C ± 2 deg.C Relative humidity : 90 %RH to 95 %RH Test duration : 500 h ± 12 h Load : Votage Rating Loading method : 1.5 h on and 0.5 h off (across terminations 1 and 3) Brush setting point : middle point
Endurance (Under Rated Load)	Total resistance change shall be within ± 5 % of initial value.	Test temperature : 70 deg.C ± 2 deg.C Test duration : 500 h ± 12 h Load : Votage Rating Loading method : 1.5 h on and 0.5 h off (across terminations 1 and 3) Brush setting point : middle point
Endurance (To Sliding)	Total resistance change shall be within ± 15 % of initial value.	Number of test revolution : 10 revolution (without electrical load) Revolutional speed : 5 /min to 10 /min One revolution means more than 90 % of the total electrical range.

4 Application Notes

4.1 Mounting Notes

Reflow Soldering	When reflow soldering, please observe below conditions. 〔Reflow Soldering Profile〕 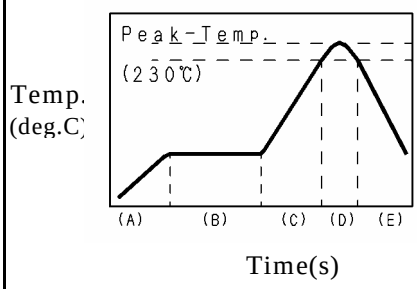 (A)Heat-up zone 1 Room-temp. to preheat zone: 30 s to 60 s (B)Preheat zone 140 deg.C to 180 deg.C : 60 s to 120 s (C)Heat-up zone 2 Preheat zone to 230 deg.C : 20 s to 40 s (D)Melting-heat zone Peak-temp. : 5 s max Refer to the following (230 deg.C or more) graph. (E)Cooling zone 200 deg.C to 100 deg.C 1 deg.C/s to 4 deg.C/s 〔Recommended condition〕 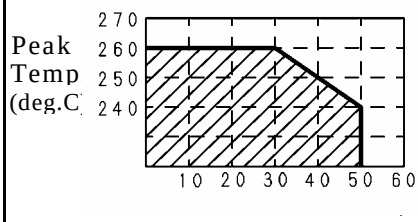 Time(s)(230 deg.C or more) (1)In case of reflow soldering,please measure actual temp. on the product surface and observe recommended condition described left. (2)In case of exceeding recommended condition, please consult with us before use. (3)The temp. strongly depends on measuring method of profile, please note how to do it. (4)In case that temp.changes by PWB size, mounting density and so on, please check them by each PWB. ※Reflow times should not be exceeding twice.
Manual Soldering	When manual soldering, please observe below condition. ・Soldering iron : 20 W maximum ・Soldering iron tip temperature : 350 deg.C maximum ・Soldering time : 3 s maximum *Do not mount solder on the surface of the resistor base.
Soldering Notes (1)	This trimmer potentiometer is available for reflow soldering and manual soldering only.
Soldering Notes (2)	Solder and flux dissipated on the surface of element and contactor cause fatal damage, therefore in case of making wash and rinse, please consult before use.

(2)Design PCB
When designing land pattern, please design it,in accordance with recommended land layout deseribed in this production specifications for information.

(3)Mounting Notes
Mounting top side pressure loaded on the trimmer potentiometer shall be 2 N maximum.
Overload is afraid to cause fatal damage as transform or breakdown.
After soldering ,solder ball or solder scrap may cause short between the land pattern,so please make enough insulation there.
In chip placers,the recommended size of the cylindrical pick -up nozzle should be outer dimension 1.5-1.8mm dia.and inner dimension 1.3mm dia.

(4)Adjustment Notes

Use suitable adjusters that fit comfortably in driver slot.
The adjuster of a figure below and top shape is recommended.(Purchasable at our company.)

・Top shape of the adjuster : For the minus shape

Adjusters available on the market,which are processed in round shape at the tip of ceramic chip,are highly recommended(Radius0.15mm is adequate).

<Adjuster of the market,original>
Maker : Vessel
Part Name : Adjuster for ceramic
Part Number : No.9000 -1.3×30

・Top shape of the adjuster : For the minus shape

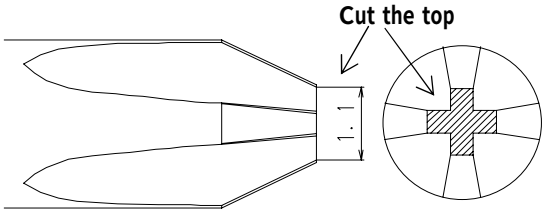

Adjusters available on the market,which are processed with cutting at the tip of ceramic chip, are highly recommended(Adequate to be cut with longitudinal dimention of 1.05mm-1.1mm at the tip).

<Adjuster of the market,original>
Maker : Vessel
Part Name : Adjuster for ceramic
Part Number : No.9000 +0×30

Adjusting top side pressure loaded on the contactor shall be 2 N maximum.
Overload is afraid to cause fatal damage as transform or breakdown of adjustment knob.
In case that the moving contact is set near the border portion between electrically effective and non-effective range ,electrically non-effective and open range, be afraid to be deviation of setting value. So avoid the setting like this.

(5)Lock paint

Avoid applying any lockpaint otherwise intrusion or dissipation of the paint may cause contact dectect. In case of being subjected to apply it,please avoid using adhesives that may generate corrosive gas.

4.2 Circuit Diagram Notes

(1)Power Rating

The Maximum value of electric power which can continuously dissipated from all area of a resistive element at the rated ambient temperature.
In general, rated power shall be registrated in accordance with size & kind of them.
Please observe to use below rated power.Continuously dissipation is afraid to cause fatal damege, for example,deviation,firing,smoking.

(2)Influence of ambient temperature

Influence of ambient temperature can not be neglected for operating trim-pot in general case.
Please comply with power derated curve,in case of using it under the condition of exceeding specified power rating.

4.3 Mounting Notes

This trimmer potentiometer is not available for sealed type, so this is afraid to be influented fatally under the following conditions.

(1)Corrosive gas atomosphere of Cl, H_2S,NH_3,$N0_X$,$S0_2$ and so on.
(2)Moisture atomosphere of waterdrop, dewdrop and so on.
(3)Water,Salt,oil,chemicals,solvents and so on.
(4)Atmosphere of direct solar radiation.

4.4 Storage Notes

Storage under the following condition should be avoided.
Be afraid to degrade some performances and soldering wettability.

(1)Temperature:less than -10 deg.C and more than 40 deg.C,
Relative humidity:more than 85 %.
(2)Atmosphere of corrosive gas.
(3)Long term storage of over 6 months after delivery.
(4)Atmosphere of direct solar radiation.

Please store the package without unsuitable load and stress.
While remaining some product after opening the package, any countermeaure of shutting moisture gas and so on,should be done.

4.5 Application Notes for electric equipments and instruments

Although enough care is taken to ensure trimmer potentiometer quality.
As life-end breakage mode,some fatal trouble might generate,such as spec-out resistance change, short or open circuits, abnomally generated heat.
So please review the affect of any single fault of a potentiometer in advance.

(1)The product specification for information ensures the quality of pre-set potentiometers.
For applying ,please should evaluate this product under the condition built in the appliances.
(2)The troubles caused by applying this product under out-specification should not be warranbted.
(3)When applying for high-excellent liabilty and security appliances,for example,traffic transportation equipments(train,auto vehicles,traffic-signal equipments),medical apparatus, aircraft, spacecraft,heating,firing,gas,rotating equipment,security equipment, atomic-power equipment, machine-tool,and so on.
Please make enough considerations to design fail-safe circuit system for safety as followings.
*To make a safety system by a protective circuit or a protective device.
*To make a safety system by the redundant circuit so that the single fault of a trimmer potentiometer does not cause a dangerous situation.
(4)In case of arising some questions on the safety of this product,please don't hesitate to contact with our company and further technical evaluation should be done.

5 Operation of product specification for information

(1)Please return one set specification as approval one with accepted stamp or sign,after confirming and checking it .
In case that it will not be returned,in spite of taking three months or more from issue date noted on the cover page of this specification.
We could estimate that it has been already accepted, so please consider to operate it.

(2)Changing the content of product of specification for information is to be performed after pre-coordination with customer.
When you confirm revision of this specification, the previous version shall lose its validity.

6 Packaging Methods

<Carrier Tape>

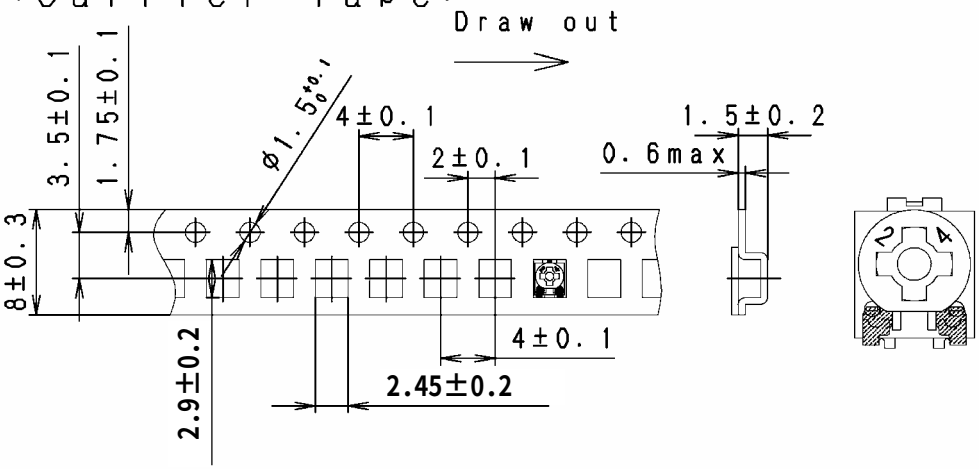

<Reel>

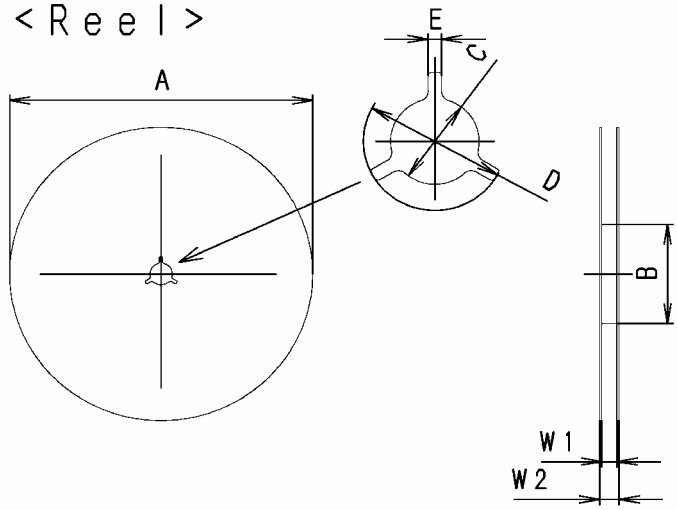

<Quantity>

NO	Part Number	Quantity/Reel
1	EVM2GSX80B**	3000

NO	A	B	C	D	E	W1	W2
1	178	60	13	21	2	8.4	14.4
Tolerance	±2	min.	±0.2	±0.8	±0.5	+2 −0	max.

<Taping Methods>

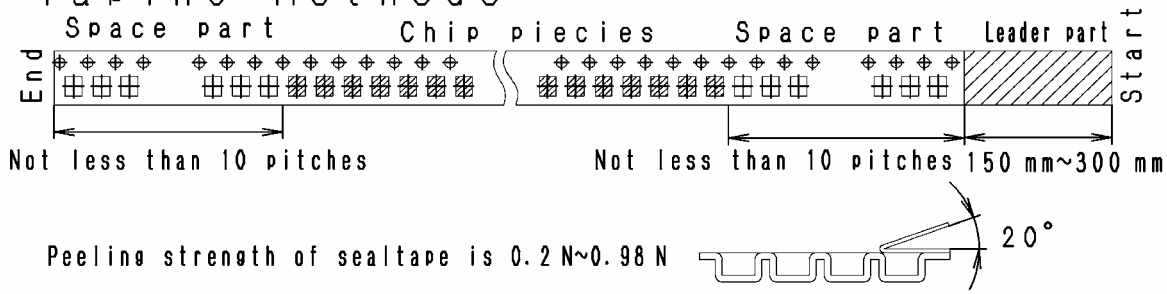

Peeling strength of sealtape is 0.2 N~0.98 N

Part Name 2mm Square Trimmer Potentiometers	Issue	Revisions
Part No. EVM2GSX80B**	Drawing No. EVM2GSE00 1	9/11

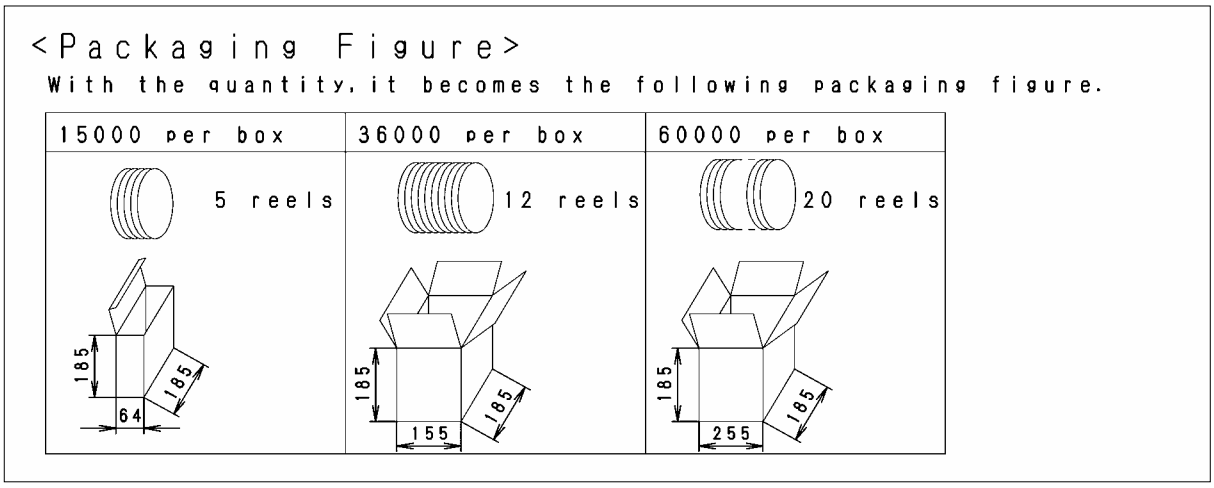

※ Production site
Country : Japan
Plant : Panasonic Electronic Devices Japan Co., Ltd.

Reel Label (Example)

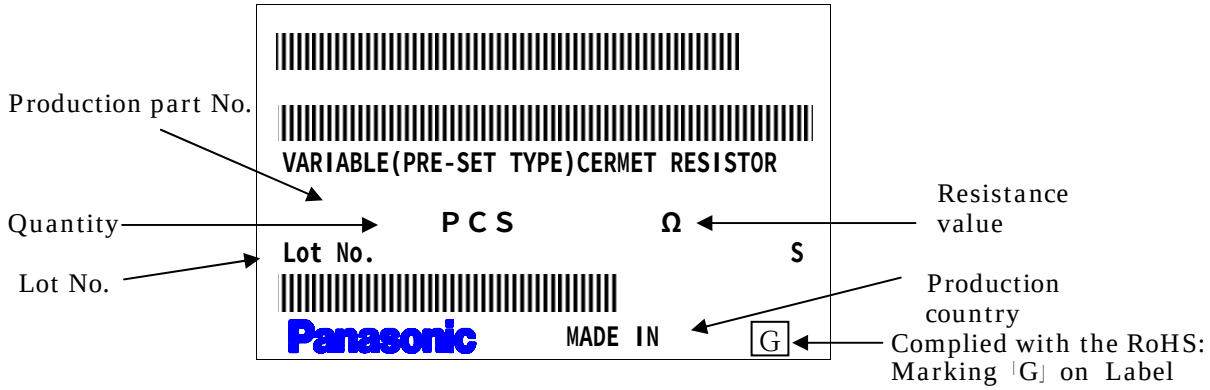

Indication of Lot No. (Sample)

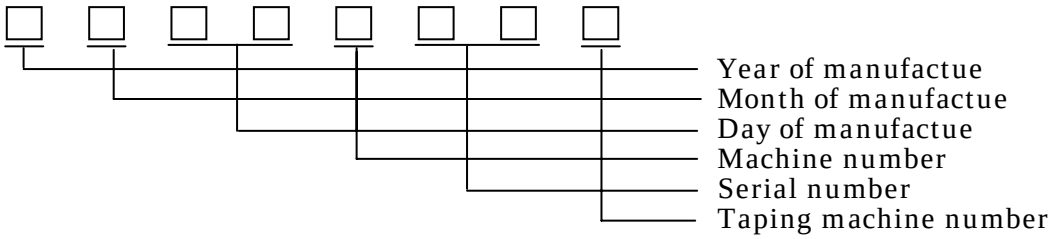

Packaging Label

CONTENTS

DATE: ORDER NO : CARTON NO :

PART NO	CUSTOMER'S PART NO	QUANTITY	MADE IN

TO BE FORWARRDED

PSC.OUT OF TOTAL PSC

Part Name 2mm Square Trimmer Potentiometers	Issue	Revisions	
Part No. EVM2GSX80B**	Drawing No. EVM2GSE00 1		10/11

THE PART NUMBER CHART

NO	Customer Part No.	Resist	Panasonic Part No.	Marking
1		１００Ω	ＥＶＭ２ＧＳＸ８０Ｂ１２	１２
2		１５０Ω	ＥＶＭ２ＧＳＸ８０ＢＣ２	Ｃ２
3		２２０Ω	ＥＶＭ２ＧＳＸ８０ＢＥ２	Ｅ２
4		３３０Ω	ＥＶＭ２ＧＳＸ８０ＢＹ２	Ｙ２
5		４７０Ω	ＥＶＭ２ＧＳＸ８０ＢＱ２	Ｑ２
6		６８０Ω	ＥＶＭ２ＧＳＸ８０ＢＳ２	Ｓ２
7		１ｋΩ	ＥＶＭ２ＧＳＸ８０Ｂ１３	１３
8		１．５ｋΩ	ＥＶＭ２ＧＳＸ８０ＢＣ３	Ｃ３
9		２．２ｋΩ	ＥＶＭ２ＧＳＸ８０ＢＥ３	Ｅ３
10		３．３ｋΩ	ＥＶＭ２ＧＳＸ８０ＢＹ３	Ｙ３
11		４．７ｋΩ	ＥＶＭ２ＧＳＸ８０ＢＱ３	Ｑ３
12		６．８ｋΩ	ＥＶＭ２ＧＳＸ８０ＢＳ３	Ｓ３
13		１０ｋΩ	ＥＶＭ２ＧＳＸ８０Ｂ１４	１４
14		１５ｋΩ	ＥＶＭ２ＧＳＸ８０ＢＣ４	Ｃ４
15		２２ｋΩ	ＥＶＭ２ＧＳＸ８０ＢＥ４	Ｅ４
16		３３ｋΩ	ＥＶＭ２ＧＳＸ８０ＢＹ４	Ｙ４
17		４７ｋΩ	ＥＶＭ２ＧＳＸ８０ＢＱ４	Ｑ４
18		６８ｋΩ	ＥＶＭ２ＧＳＸ８０ＢＳ４	Ｓ４
19		１００ｋΩ	ＥＶＭ２ＧＳＸ８０Ｂ１５	１５
20		１５０ｋΩ	ＥＶＭ２ＧＳＸ８０ＢＣ５	Ｃ５
21		２２０ｋΩ	ＥＶＭ２ＧＳＸ８０ＢＥ５	Ｅ５
22		３３０ｋΩ	ＥＶＭ２ＧＳＸ８０ＢＹ５	Ｙ５
23		４７０ｋΩ	ＥＶＭ２ＧＳＸ８０ＢＱ５	Ｑ５

THE PART NUMBER CHART

NO	Customer Part No.	Resist	Panasonic Part No.	Marking
24		６８０ｋΩ	ＥＶＭ２ＧＳＸ８０ＢＳ５	Ｓ５
25		１ＭΩ	ＥＶＭ２ＧＳＸ８０Ｂ１６	１６
26				
27				
28				
29				
30				
31				
32				
33				
34				
35				
36				
37				
38				
39				
40				
41				
42				
43				
44				
45				
46				

			Drawing No	EVM2GSE00 1	11/11
Issue	Revisions				